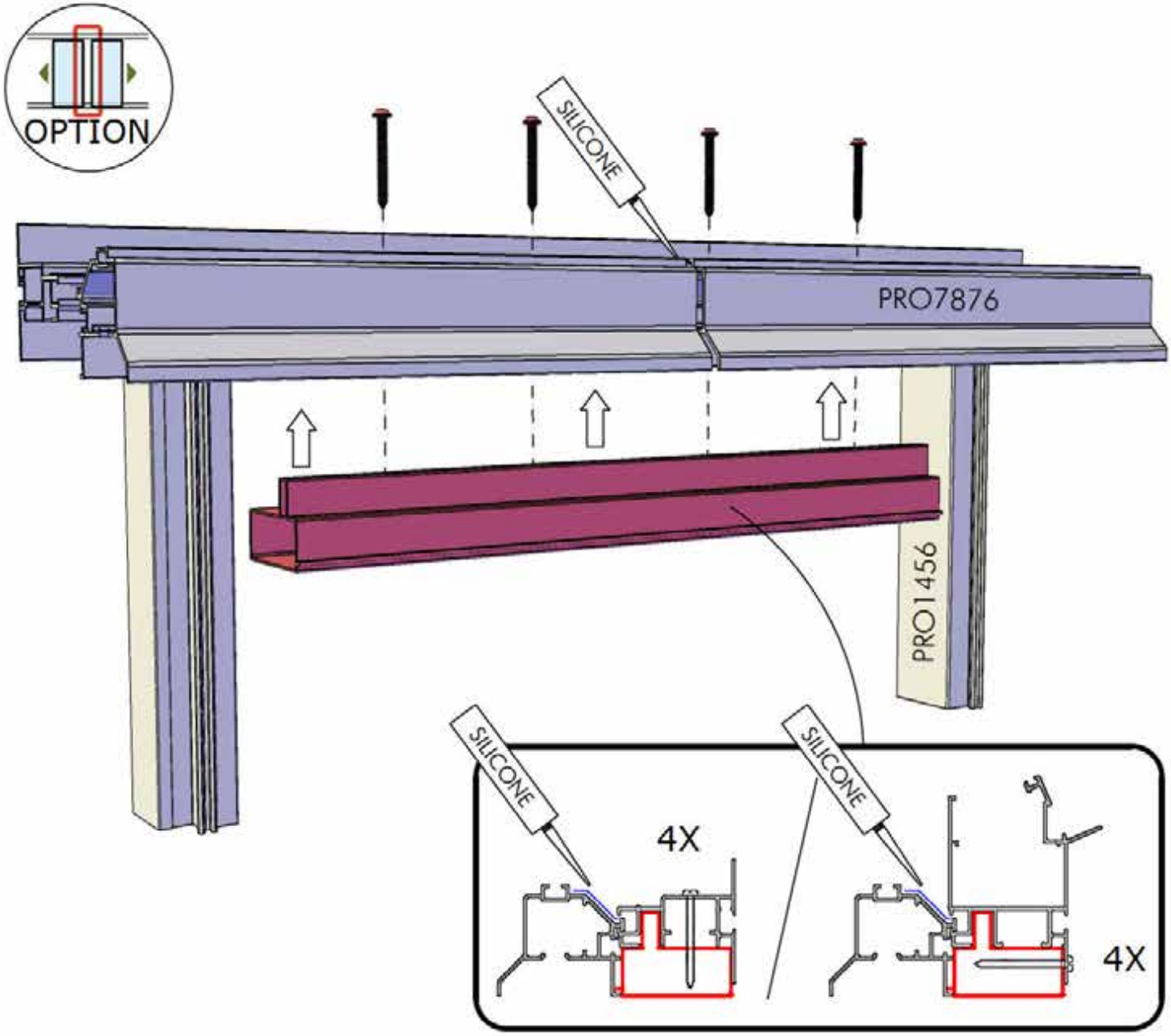
OPTION
SILICONE
PRO7876
PRO1456
SILICONE
SILICONE
4X
4X

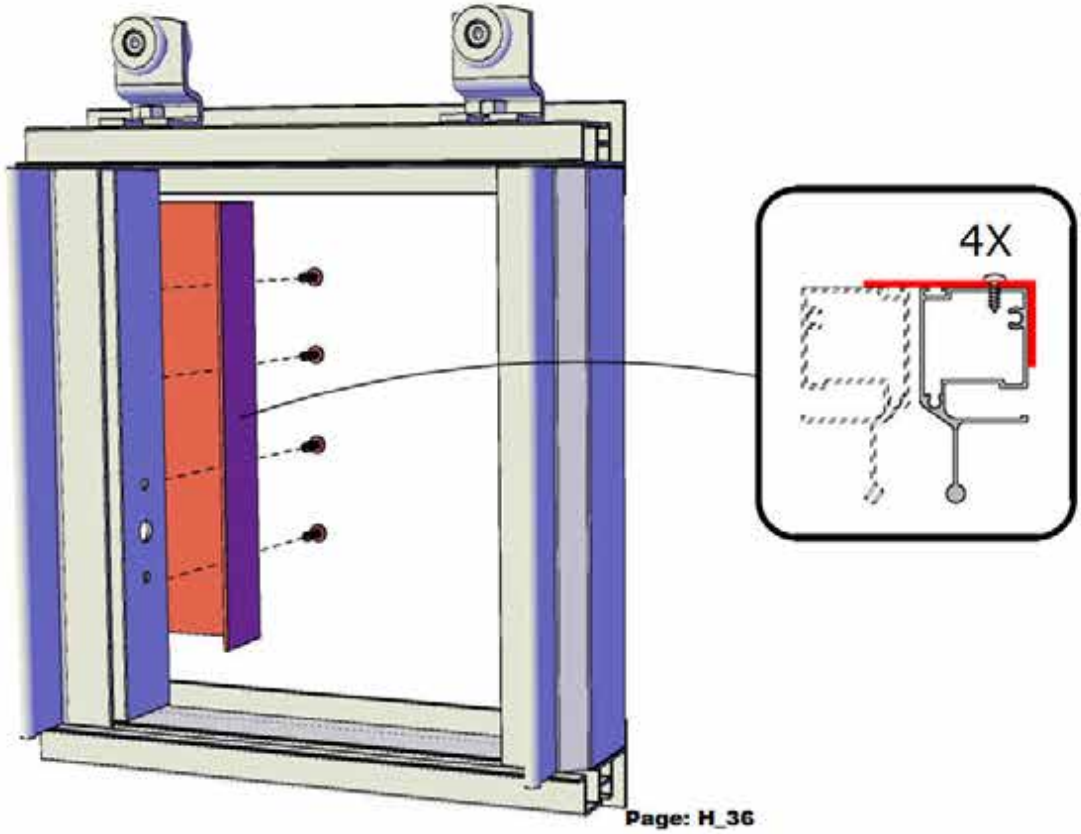
4X